ALLSOR

ALLSOR TECHNOLOGY CORPORATION

Hsinchu
5F.-3, No. 6, Taiyuan 1st St., Zhubei City,
Hsinchu County 302 , Taiwan (R.O.C.)
Tel+886-3-560-1155

Taipei
10F., No. 68, Sec. 4, Chenggong Rd.,
Neihu Dist., Taipei City 114 , Taiwan (R.O.C.)
Tel+886-2-2792-4598

New Taipei
9F., No.19, Lane 3, Sec. 1, Jhongjheng E.
Rd., Danshuei Dist., New Taipei City 251, Taiwan (R.O.C.)
Tel+886-2-2620-1000

Dong Guan
Room 101, No.3 Tai he road Huan Zhu Li Village Chang
Ping Town Dong Guan City Guang Dong Province China
Tel+86-769-82827098

E-mail：service@allsor.com

JANUARY

2022

NICHIFUJI INDUSTRY CO.,LTD.
日富士産業 有限会社

地址：〒 224-0033 神奈川県横浜市都筑区
茅ケ崎東 4 丁目 7 - 15　アルファビル 2F
TEL：045-949-3338(代表)
FAX：045-949-2588
E-mail：k-tani@nichifuji.jp

INDUSTRIE 4.0

www.excelliancemos.com

SHORT FORM CATALOG

Company Info

Excelliance MOS

Excelliance MOS Co., Ltd. (EMC), founded in 2008, is a power device and IC design company, specializes in power semiconductor process development, high efficiency power device, IC and system design by the capability of vertical integration.

The manager and technical teams of EMC have over 20 years experience and had demonstrated their capability successfully. The developed devices can be applied widely to the power system of electronic products, such as, personal computer, notebook, pad, monitor, TV, LED lighting, switching power and other consumer electronics.

EMC consistently delivers inventive power solutions according to customers' requirement and adds value to end products by synthesizing technological innovation, uncompromised quality, and devotion to customer service.

OUR UNIQUENESS
GREEN YOUR POWER

Patent List

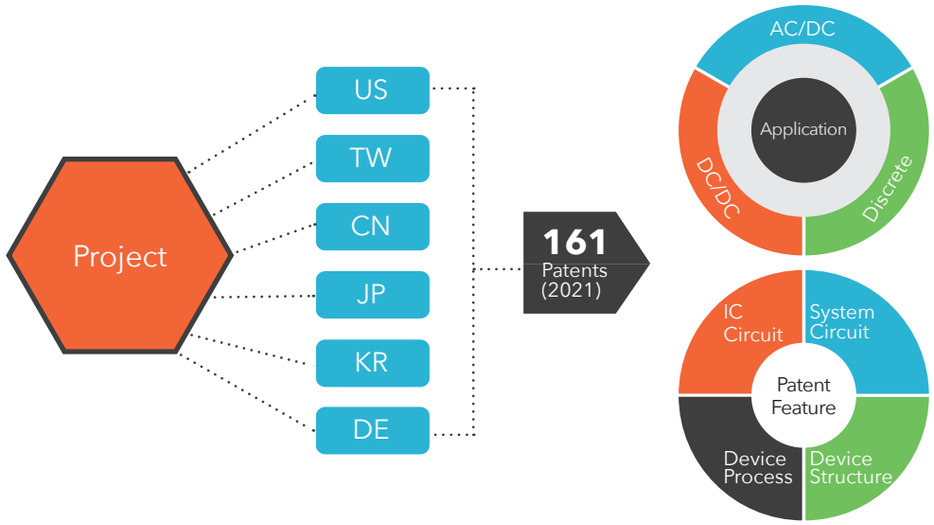

IC Circuit	System Circuit	Device Structure	Device Process
US8,476,842B2	US8,740,451B2	US8,222,678B2	US8,518,778B2
US9,118,249B2	US8,598,810B2	US8,421,180B2	US8,349,691B2
US9,025,346B2	US9,209,699B1	US9,153,652B2	US8,227,858B2
US9,106,144B2	TW I708464	US8,786,397B1	US8,664,714B2
US8,873,255B2	TW I683516	US10,388,784B2	
US8,933,678B2		US9,653,560B1	
US9,058,043B2		TW I679770	
US9,134,738B2		TW I615889	
US9,455,632B1			
US10,693,453B1			
US9,941,357B2			
US10,826,288B1			
US10,826,491B1			
US9,659,921B2			

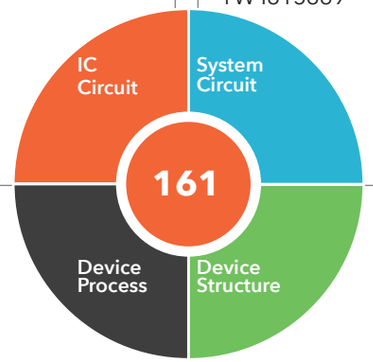

Core & Power MosFETs Family

1. **S.G. (Split Gate)**
   Low Qg/Ron/Ciss for Vcore MOS,SR MOS
2. **S.J. (Super Junction)**
   Low Ron HV MOS, low VF Schottky
3. **WLCSP (wafer-level-chip-scale-package)**
   Tiny size for limited space
4. **P.B. (Power Block)**
   Excellent power dissipation for H/L dual NMOS

N Channel
- 20V-30V: NB, MB, Battery, Networking and General Load SW
- 60V-150V: Display, Auto, Power Tools and SR(Syn. Rectification)
- 500V-700V: AC-DC SMPS and Telecom

P Channel
- 20V-30V: NB, MB, Air Cleaner, Battery and General Load SW
- 40V-100V: Display and Networking

N+P Channel
- 20V-100V: Fan control, Charger and Inverter

Schottky (Specific Low-Vf)
- 50V-120V: AC-DC SMPS and Telecom

Core of Power ICs

1. **Green Design**
   Low Ron&Iq for power switch, LDO, converters
2. **Flip Chip**
   High power density applications
3. **System in Package**
   AC/DC PWM IC+HV MOS;SR controller+SR MOS

Power ICs Family

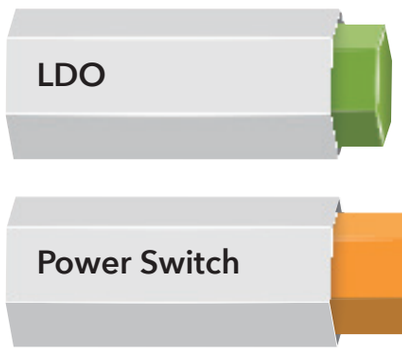

NB, MB, Networking and Display small current application, Io 0.3A ~ 3A

NB, MB, Networking and Display USB or Load sequence control, protection application

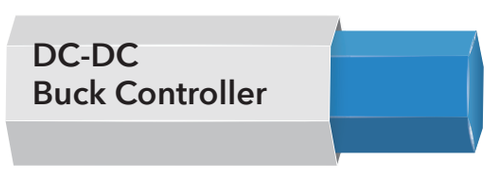

NB, MB, Networking and SMPS high efficiency voltage conversion (HV to LV) application

NB, MB and SMPS high efficiency voltage conversion (HV to LV) application

SMPS and Telecom voltage conversion (AC to DC) application

Power Solutions for NB & M/B

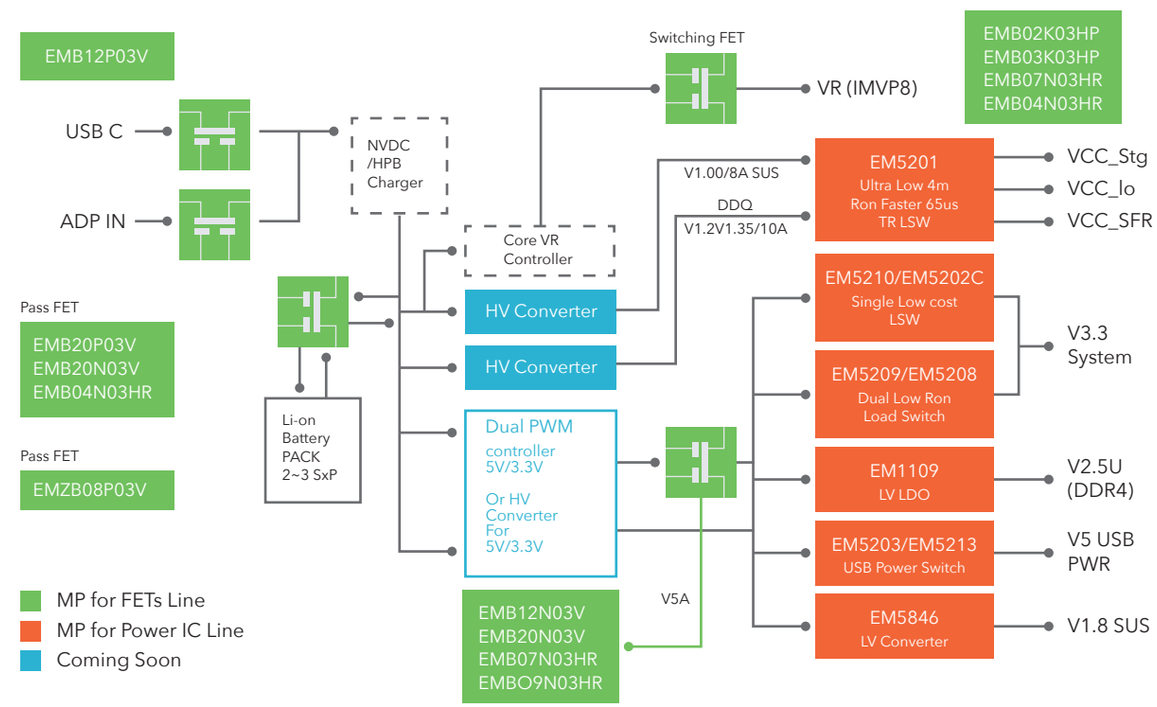

Power Solutions for TV & MNT

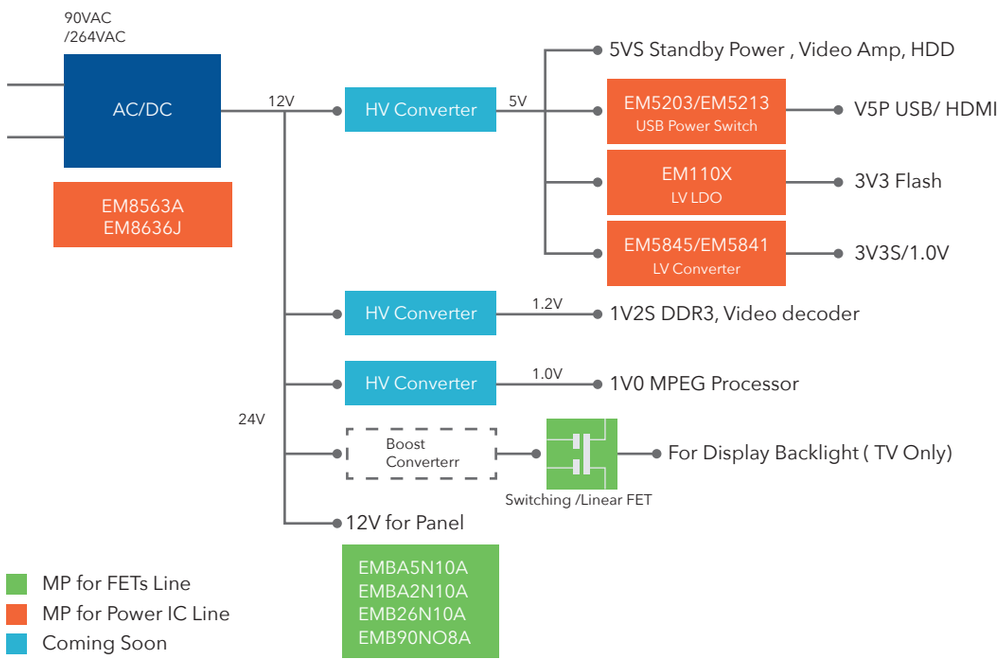

Power Solutions for Network

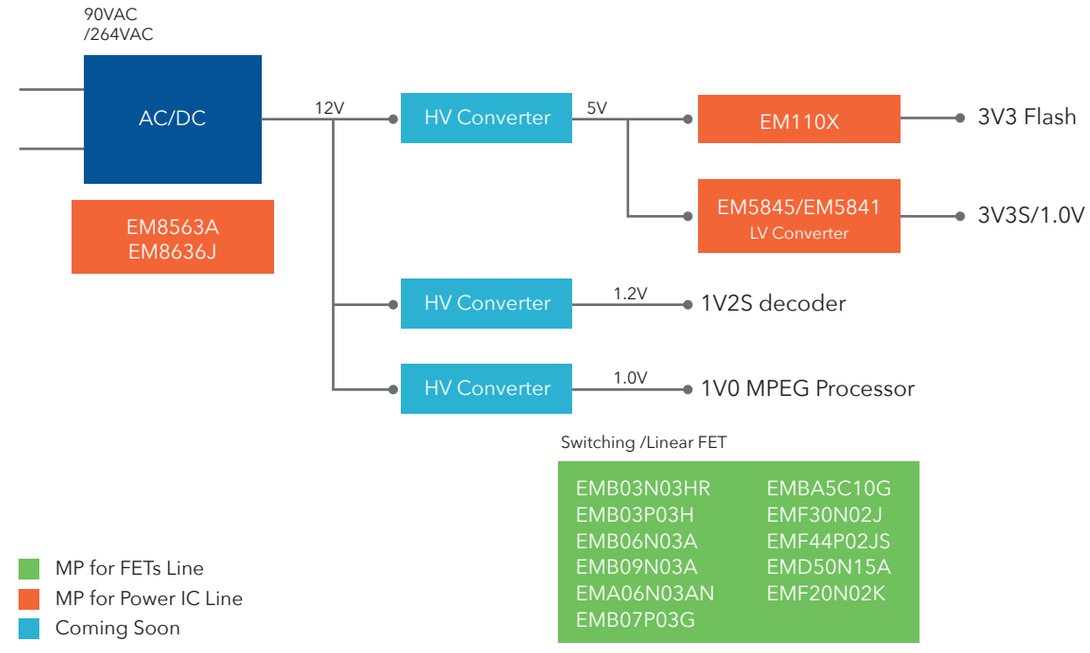

Power Solutions for USB-PD

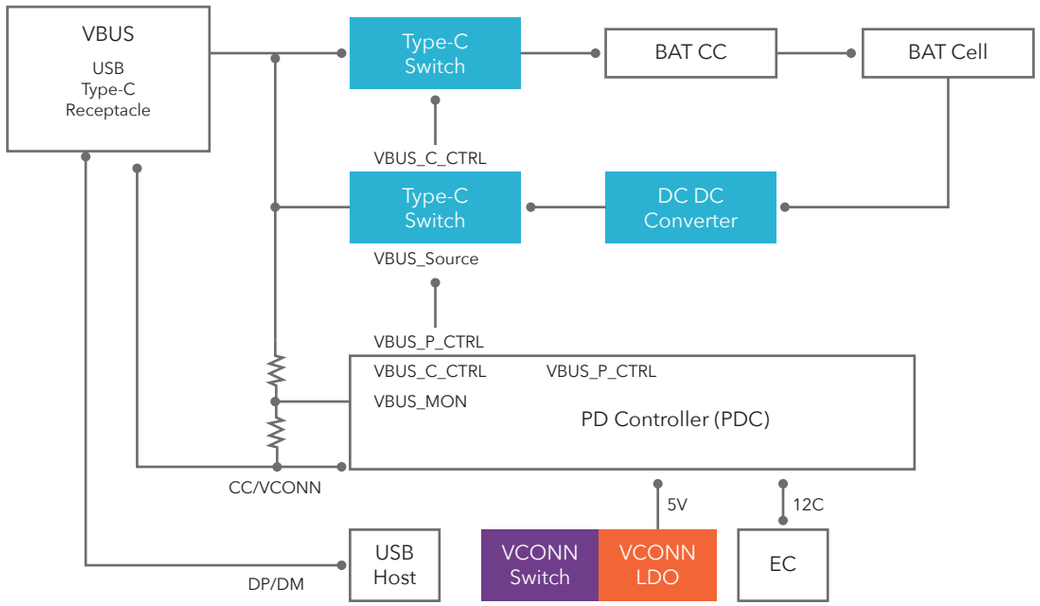

- MP for FETs Line
- MP for Power IC Line
- Coming Soon

Packages

EDFN3*3

3 x 3 x 0.8

EDFN5*6

5.05x5.7x1.025

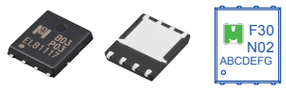

TO-252

6.55 x 5.75 x 2.3

TO-220

10.15 x 15.1 x 4.5

TO-220F

10.03 x15.55 x4.55

TO-251

6.55 x 5.775 x 2.3

SOT-23

2.9 x 1.6 x 0.91

TSOP-6

2.9 x 1.6 x 0.95

SOT-223

6.5 x 3.5 x 1.6

SOT-89

4.5 x 2.5 x 1.5

SC-70

2.1 x 1.3 x 0.85

SOP-8

4.9 x 3.9 x 1.41

DIP-7

9.585 x 6.375 x 3.2995

DIP-8

9.585 x 6.605 x 3.94

Dimension in mm

N-Channel MOSFET

P/N	Package	Channel	BVdss (V)	Vgs (±V)	VGS(th) max.(V)	Id (A)	Rds(on) mΩ max.					Qg typ.(nC)	Qgd typ.(nC)	Ciss typ.(pF)	Crss typ.(pF)
							10V	7V	4.5V	2.5V	1.8V				
EMZF60N03Z	WLCSP	N	30	12	1.2	3.2			60	80	110	8.5	2.7	515	75
EMF14N02VAT	EDFN2*2	N	20	12	1.2	8			14.8	23		14.2	5	1192	174
EMF20N02VA	EDFN2*2	N	20	12	1.2	7			20	25		8.5	3.5	560	150
EMF20N02VAT	EDFN2*2	N	20	12	1	7			20	25	35	8.5	3.5	560	150
EMB09N03VAT	EDFN2*2	N	30	20	3	10	9.5		13.5			12	7.4	828	174
EMB12N03VAT	EDFN2*2	N	30	20	3	9	11.5		16			9	4	1050	87
EMB15N03VA	EDFN2*2	N	30	20	3	8	15		24			7.8	4.7	597	96
EMB20N03VA	EDFN2*2	N	30	20	3	7	20		30			5	2.8	520	62
EMB20N03VAT	EDFN2*2	N	30	20	3	7	20		30			5	2.8	520	62
EMB32N03VAT	EDFN2*2	N	30	20	3	5.5	35		52			8	1.1	332	26
EMF50A02VA	EDFN2*2	Dual N	20	12	1.2	4.8			45	60	85	4.6	1.5	355	40
EMB32A03VA	EDFN2*2	Dual N	30	20	3	5.5	35		52			7.5	2.3	332	26
EMB03N03V	EDFN3*3	N	30	20	3	37	3		4			21.2	6.5	2979	224
EMB04N03V	EDFN3*3	N	30	20	3	32	4		6.6			21	9.3	2806	202
EMB06N03V	EDFN3*3	N	30	20	3	26	6		9.5			27	16	3292	355
EMB07N03V	EDFN3*3	N	30	20	3	24	7		9			8.5	3.5	1014	93
EMB07N03VQ	EDFN3*3	N	30	20	2.5	73	7.8		10.5			8.9	4.1	981	97
EMB09N03V	EDFN3*3	N	30	20	3	20	9		12.5			13	7.4	828	174
EMB12N03V	EDFN3*3	N	30	20	3	18.5	11.5		16			9	4	1050	87
EMB15N03V	EDFN3*3	N	30	20	3	16	15		24			7.6	4.2	730	96
EMB20N03V	EDFN3*3	N	30	20	3	12	20		30			7	4.5	484	51
EMB20N03VZ	EDFN3*3	N	30	20	2.5	22	20		30			6	2.8	553	73
EMP29N04VS	EDFN3*3	N	40	20	2.4	58	3.6		4.8			45.8	8.9	2805	64
EMB07N04V	EDFN3*3	N	40	20	3	24	7.5		11			47	14.5	1977	230
EMB12N04V	EDFN3*3	N	40	20	3	18	12.8		25			24	6.6	1090	106
EMB35N04V	EDFN3*3	N	40	20	3.2	12	28		45			10	3	996	59
EMB06N06VS	EDFN3*3	N	60	20	3	50	5.2		7.5			42	12	2117	79
EMB08N06VS	EDFN3*3	N	60	20	3	30	8		12			16	1.2	1168	19
EMB16N06V	EDFN3*3	N	60	20	3	15	16		25			50	14.7	2195	129
EMB60N06V	EDFN3*3	N	60	20	3.2	8	60		75			12	2.6	685	21
EMB70N08V	EDFN3*3	N	80	20	3	6	65		85			15	4.1	1110	51
EMB90N08V	EDFN3*3	N	80	20	3	6.5	85		110			12	2.2	812	37
EMB12N10VS	EDFN3*3	N	100	20	3	32	12		15			23	8.2	2130	29
EMBA5N10V	EDFN3*3	N	100	20	3	5	150		225			18.8	4.5	740	50
EMBB0N10V	EDFN3*3	N	100	20	3	3	220		260			20	5	858	16
EMF14A02V	EDFN3*3	Dual N	20	12	1.2	7			14.8	23		10	3.7	700	187
EMZF14A02V	EDFN3*3	Dual N	20	12	1.2	7			14	20		14.2	5	1192	174
EMZF14R02W	EDFN3*3	Dual N	20	12	1	9.5			14	17	25	15.1	4.2	987	124
EMF20A02V	EDFN3*3	Dual N	20	12	1.2	6			20	28		8.5	3.5	560	150

N-Channel MOSFET

P/N	Package	Channel	BVdss (V)	Vgs (±V)	VGS(th) max.(V)	Id (A)	Rds(on) mΩ max.					Qg typ.(nC)	Qgd typ.(nC)	Ciss typ.(pF)	Crss typ.(pF)
							10V	7V	4.5V	2.5V	1.8V				
EMZF20A02V	EDFN3*3	Dual N	20	12	1.2	6			20	28		11.7	3.8	964	129
EMZF20R02V	EDFN3*3	Dual N	20	12	1.2	6			22	32		10	3.5	700	187
EMZF20R02W	EDFN3*3	Dual N	20	12	1.2	8			20	24	39	11.5	3.9	941	122
EMB09A03VP	EDFN3*3	Dual N	30	20	3	16	9		13			6.8	2.3	959	83
EMB17A03V	EDFN3*3	Dual N	30	20	3	10	17		26			7.8	4.7	597	96
EMB21A03V	EDFN3*3	Dual N	30	20	3	9	21		32			5	2.8	520	62
EMZB21A03V	EDFN3*3	Dual N	30	20	3	9	21		32			5.7	3	530	81
EMZB21A03VG	EDFN3*3	Dual N	30	20	3	9	21		29			5.7	3	530	81
EMB60A06V	EDFN3*3	Dual N	60	20	3.2	6	60		85			7.2	4	633	44
EMBE0A10V	EDFN3*3	Dual N	100	20	3	1.8	500		570			7.6	2.7	328	21
EMBJ7A25V	EDFN3*3	Dual N	250	20	3	0.5	1700		2000			5.5	2	225	7.5
EMB12K03V	EDFN3*3	N1	30	20	3	10	17		26			7.8	4.7	597	96
		N2	30	20	3	12	12.5		20			10	6.5	762	130
EMF30N02H	EDFN5*6	N	20	12	1.2	10			30	51		10	3.5	627	94
EMB01N03HCS	EDFN5*6	N	30	12	3	180	0.75		1.1			155	20	12200	1050
EMB01N03HR	EDFN5*6	N	30	20	3	200	1.2		1.6			85	30	11245	1088
EMB02N03HR	EDFN5*6	N	30	20	3	150	1.7		2.6			45	21	4737	389
EMP21N03HR	EDFN5*6	N	30	20	3	100	2.3		3.7			28	11	3813	440
EMP21N03HC	EDFN5*6	N	30	20	3	100	2.1		3.3			28	11	3813	440
EMP31N03HQ	EDFN5*6	N	30	20	2.5	97	3.1		4.2			26	10.7	2543	248
EMB03N03H	EDFN5*6	N	30	20	3	75	3		5			27	16	3850	522
EMB03N03HS	EDFN5*6	N	30	20	3	100	3.2		5			17	5.4	2328	66
EMB03N03HR	EDFN5*6	N	30	20	3	75	3		4			21.2	6.5	2979	224
EMB04N03HS	EDFN5*6	N	30	20	3	84	4		6			17	5.4	2328	66
EMB04N03HR	EDFN5*6	N	30	20	3	75	4		5			14.3	5.9	2094	162
EMB05N03HR	EDFN5*6	N	30	20	3	75	5		6.5			12.8	4.8	1428	122
EMB06N03HR	EDFN5*6	N	30	20	3	75	6		9.5			16	7	2040	158
EMB07N03HR	EDFN5*6	N	30	20	3	50	7		9			8.5	3.5	1014	93
EMP75N03HR	EDFN5*6	N	30	20	3	50	7.5		10.5			8.5	3.5	1014	93
EMB07N03HQ	EDFN5*6	N	30	20	3	50	7.8		10.5			8.6	3.9	967	95
EMB07N03HS	EDFN5*6	N	30	20	3	50	7		10.6			6.8	2.1	1077	15
EMB09N03HR	EDFN5*6	N	30	20	3	50	9.5		14			9.2	4.8	992	91
EMB12N03H	EDFN5*6	N	30	20	3	25	11.5		23			4.5	3.7	1060	145
EMB12N03HR	EDFN5*6	N	30	20	3	25	11.5		16			9	4	1050	87
EMP16N04HS	EDFN5*6	N	40	20	3	100	1.6		2.5			34.3	4.3	6078	250
EMP25N04HS	EDFN5*6	N	40	20	2.5	172	2.8		4.5			21.4	9	2322	73
EMP29N04HS	EDFN5*6	N	40	20	2.4	100	2.9		4.2			45.8	8.9	2805	64
EMD04N04H	EDFN5*6	N	40	20	4	80	4	5.5				83.6	34.5	3970	597
EMB07N04H	EDFN5*6	N	40	20	3	55	7		11			47	14.5	1977	230

N-Channel MOSFET

P/N	Package	Channel	BVdss (V)	Vgs (±V)	VGS(th) max.(V)	Id (A)	Rds(on) mΩ max.					Qg typ.(nC)	Qgd typ.(nC)	Ciss typ.(pF)	Crss typ.(pF)
							10V	7V	4.5V	2.5V	1.8V				
EMP29N05H	EDFN5*6	N	45	20	2.2	100	2.9		4			25	9.5	3322	96
EMB03N06HS	EDFN5*6	N	60	20	2.5	97	3		4.5			46.7	21.2	4321	33
EMD03N06HS	EDFN5*6	N	60	20	4.5	97	3					57	11	4685	60
EMB04N06H	EDFN5*6	N	60	20	2.5	84	4		5.5			49	9	3250	50
EMD04N06H	EDFN5*6	N	60	20	4	75	5					59	19	5085	190
EMB06N06H	EDFN5*6	N	60	20	3	80	5.2		7.5			62	11	4246	248
EMB06N06HS	EDFN5*6	N	60	20	3	77	5.2		7.5			42	12	2117	79
EMD06N06H	EDFN5*6	N	60	20	4	68	6					40	11	3057	112
EMB08N06H	EDFN5*6	N	60	20	3	60	8		14			38	5.2	2869	68
EMD08N06H	EDFN5*6	N	60	20	4	60	8					30.5	8.7	2180	77
EMD12N06H	EDFN5*6	N	60	20	4	48	12					21	6	1514	56
EMB16N06H	EDFN5*6	N	60	20	3.2	42	16		25			55	15	2460	157
EMB60N06H	EDFN5*6	N	60	20	2.9	15	58		72			8.5	5.2	562	31
EMD09N08H	EDFN5*6	N	80	25	4	56	9					64	22	3905	363
EMD16N08H	EDFN5*6	N	80	30	4	47	12.8					21	5	1683	29
EMB05N10H	EDFN5*6	N	100	20	3	122	5.5		7.5			22.5	12	3421	30
EMP85N10H	EDFN5*6	N	100	20	2.5	107	7.5		10			21.2	7.6	2852	30
EMB12N10H	EDFN5*6	N	100	20	3	50	12		15			23	8.2	2130	29
EMB14N10H	EDFN5*6	N	100	20	3	44	16.5		21			64	11	4505	44
EMD14N10H	EDFN5*6	N	100	30	4	47	14					39.3	3.1	3330	43
EMB22N10H	EDFN5*6	N	100	20	3	36	22		26			21	5.6	1503	6
EMB26N10H	EDFN5*6	N	100	20	3	33	30		35			38	9.1	2725	57
EMB09A03HP	EDFN5*6	Dual N	30	20	3	15	9.5		15			13	7.4	828	174
EMB17A03H	EDFN5*6	Dual N	30	20	3	16	17		26			7.8	4.7	597	96
EMP18K03HPCS	EDFN5*6	N1	30	20	3	48	5.7		8.8			11	4.3	1327	37
		N2	30	12	3	90	2		2.8			30	9	3950	82
EMP19K03HPC	EDFN5*6	N1	30	20	2.5	47	6.6		8.8			9.7	4.2	1033	99
		N2	30	20	2.5	93	2.4		3.4			32.9	14.7	3029	299
EMP19K03HPCS	EDFN5*6	N1	30	20	3	48	5.7		8.8			11	4.3	1327	37
		N2	30	12	3	90	2.2		3.4			26	8.8	3770	82
EMP38K03HPC	EDFN5*6	N1	30	20	2.5	41	7		9.4			10	5	1050	105
		N2	30	20	2.5	60	4		5.4			20	8	2100	160
EMB02Q03HP	EDFN5*6	N1	30	20	3	53	5		7.8			13	5.3	1508	167
		N2	30	20	3	95	2		3			28	11	3813	440
EMB02K03HP	EDFN5*6	N1	30	20	3	50	5.5		8			13	5.3	1508	167
		N2	30	20	3	83	2.6		3.7			28	11	3813	440
EMB03K03HP	EDFN5*6	N1	30	20	3	15	7		9.5			8.7	2.8	975	95
		N2	30	20	3	25	3.5		4.7			17	8.5	2200	231
EMB04K03HP	EDFN5*6	N1	30	20	3	15	9.5		15			12	6.5	828	174
		N2	30	20	3	25	4.5		6.6			31	11	3150	340

N-Channel MOSFET

P/N	Package	Channel	BVdss (V)	Vgs (±V)	VGS(th) max.(V)	Id (A)	Rds(on) mΩ max.					Qg typ.(nC)	Qgd typ.(nC)	Ciss typ.(pF)	Crss typ.(pF)
							10V	7V	4.5V	2.5V	1.8V				
EMB06K03HP	EDFN5*6	N1	30	20	3	15	9.5		15			12	6.5	828	174
		N2	30	20	3	22	6.5		9.5			30	10	1983	287
EMB09K03HP	EDFN5*6	N1	30	20	3	12	15		26			6	5	597	96
		N2	30	20	3	15	9.5		15			13	7.4	828	174
EMB20L03HP	EDFN5*6	N1	30	20	3	10	20		30			11	5.8	480	75
		N2	30	20	3	13	12		20			17	8.2	1095	84
EMB08K04HP	EDFN5*6	N1	40	20	3	57	8		12			24	16	1962	225
		N2	40	20	3	41	17		32			10	6	707	81
EMBA2A06HS	EDFN5*6	Dual N	60	20	2.5	12	120		180			0.5	1.4	114	16
EMBB0A10H	EDFN5*6	Dual N	100	20	2.9	5.7	220		260			8	3.4	858	27
EME07N02A	TO-252	N	15	8	0.9	65			7	8	10	19	4	2091	172
EMF14N02A	TO-252	N	20	12	1.2	48			13.5	20		14.7	4.7	1095	164
EMF30N02A	TO-252	N	20	12	1.2	10			30	51		10	3.5	627	94
EMA06N03AN	TO-252	N	25	20	3	80	6		9.5			28.5	15.5	1800	220
EMA09N03AN	TO-252	N	25	20	3	50	9		13			12	6.9	830	131
EMA20N03A	TO-252	N	25	20	3	15	18.5		30			6	3.4	1135	102
EMB04N03A	TO-252	N	30	20	3	90	4		6.6			19	12	3570	448
EMB06N03A	TO-252	N	30	20	3	80	6		9.5			30	17	1983	287
EMB07N03A	TO-252	N	30	20	3	70	7		12.5			16.2	4.9	748	100
EMB09N03A	TO-252	N	30	20	3	50	9		13.5			13	7.4	828	174
EMB12N03A	TO-252	N	30	20	3	25	11.5		23			4.5	3.7	1060	145
EMB15N03A	TO-252	N	30	20	3	25	14		25			6	5	597	96
EMB20N03A	TO-252	N	30	20	3	15	20		31			6	3.3	1115	82
EMP29N04AS	TO-252	N	40	20	2.2	100	2.9		4.6			38	5.7	2690	53
EMB07N04A	TO-252	N	40	20	3.2	55	7		11			50	13	1915	208
EMB12N04A	TO-252	N	40	20	3	30	12		20			22	7	1700	106
EMB22N04A	TO-252	N	40	20	3	15	22		37			11	4.1	1205	57
EMB35N04A	TO-252	N	40	20	3.2	12	35	50				9.1	3	796	59
EMD04N06A	TO-252	N	60	20	4	80	4.8					59	19	5085	190
EMB06N06A	TO-252	N	60	20	3	80	5.2		7.5			62	11	4246	248
EMD06N06A	TO-252	N	60	20	4	68	6					40	11	3057	112
EMB08N06A	TO-252	N	60	20	3	60	8		14			38	5.2	2869	68
EMD08N06A	TO-252	N	60	20	4	60	8					35	11	2675	120
EMD10N06A	TO-252	N	60	20	4	53	10					30	10	2173	109
EMD12N06A	TO-252	N	60	20	4	48	12					21	6	1514	56
EMB16N06A	TO-252	N	60	20	3	42	16		25			50	14.7	2195	129
EMB25N06A	TO-252	N	60	20	3	30	28		38			29	7.9	1335	84
EMB37N06A	TO-252	N	60	20	3.2	20	37		50			29	7.4	1745	88
EMB45N06A	TO-252	N	60	20	3.2	18	45		70			18	5.1	1213	70

N-Channel MOSFET

P/N	Package	Channel	BVdss (V)	Vgs (±V)	VGS(th) max.(V)	Id (A)	Rds(on) mΩ max.					Qg typ.(nC)	Qgd typ.(nC)	Ciss typ.(pF)	Crss typ.(pF)
							10V	7V	4.5V	2.5V	1.8V				
EMB60N06A	TO-252	N	60	20	3.2	12	60		96			11	2.4	913	53
EMD09N08A	TO-252	N	80	25	4	56	9					64	22	3905	363
EMB70N08A	TO-252	N	80	20	3	12	65		85			15	2.8	1110	51
EMB90N08A	TO-252	N	80	20	3	10	85		110			12	2.2	812	37
EMB12N10A	TO-252	N	100	20	3	68	12		15			23	8.2	2130	29
EMB22N10A	TO-252	N	100	20	3	36	22		26			10.5	3.4	1503	6
EMD25N10A	TO-252	N	100	30	4	50	25					20	6.8	1323	34
EMB26N10A	TO-252	N	100	20	3	50	30		35			38	9.1	2725	57
EMB36N10A	TO-252	N	100	20	3	30	36		48			29	3.4	2042	23
EMD36N10A	TO-252	N	100	20	4	30	36					20	5.3	1503	23
EMB50N10A	TO-252	N	100	20	3	25	50		70			55	10	2780	90
EMB60N10A	TO-252	N	100	20	3	23	60		70			23	7.2	1210	38
EMD60N10A	TO-252	N	100	25	4	20	60					13.6	6	770	33
EMBA0N10A	TO-252	N	100	20	3	12	100		125			15	5	490	37
EMDA1N10A	TO-252	N	100	25	4	15	110					8.1	4	410	20
EMBA2N10AS	TO-252	N	100	20	3	17	100		150			6.4	2.4	213.8	11.7
EMBA5N10AS	TO-252	N	100	20	3	10	135		170			6.4	2.4	210	10
EMDA5N10A	TO-252	N	100	30	4	10	150					15.4	4.3	668	25
EMBB0N10A	TO-252	N	100	20	3	3.5	220		260			20	5	858	16
EMD50N15A	TO-252	N	150	30	4	36	50	60				67.5	16.6	4905	200
EMD60N15A	TO-252	N	150	30	4.5	32	60	70				38.2	14.5	2903	59
EMF65N15A	TO-252	N	150	16	1.2	20	55		65	75		107	60	7660	420
EMBB5N15A	TO-252	N	150	20	3	5	250		270			38	8	3508	22
EMBE0N15A	TO-252	N	150	20	3	3	500		540			20	4	1755	11
EMDA2N20A	TO-252	N	200	30	4.5	18	120	140				36.4	13.4	2860	46
EMDA4N20A	TO-252	N	200	30	4.5	15	140	160				90.6	25.6	7472	139
EMDE0N20A	TO-252	N	200	30	5	5	500					38	16	1321	18
EMBJ0N20A	TO-252	N	200	20	3	3.5	1000		1400			28	9	1168	10
EMDJ0N20A	TO-252	N	200	30	5	3.5	1000					19	8.1	660	9
EMDB0N25A	TO-252	N	250	30	4.5	18	220					53	20	3740	72
EMBJ0N25A	TO-252	N	250	20	3	4.4	1000		1100			10.5	3	450	15
EMBJ7N25A	TO-252	N	250	20	3	3	1700		2000			5.5	2	225	7.5
EMA06N03CS	TO-251	N	25	20	3	80	6		9.5			22	12.5	1800	220
EMA09N03CS	TO-251	N	25	20	3	50	9		15			11.5	6.9	830	131
EMB09N03CS	TO-251	N	30	20	3	50	9		13.5			12.5	7.4	828	174
EMB06N06CS	TO-251	N	60	20	3	70	5.7		8			62	11	4250	250
EMB08N06CS	TO-251	N	60	20	3	60	8		14			38	5.2	2869	68
EMB12N06CS	TO-251	N	60	20	3	48	12		18			33	9	2128	68
EMB16N06CS	TO-251	N	60	20	2.5	42	16		20			50	14.7	2195	129

N-Channel MOSFET

P/N	Package	Channel	BVdss (V)	Vgs (±V)	VGS(th) max.(V)	Id (A)	Rds(on) mΩ max.					Qg typ.(nC)	Qgd typ.(nC)	Ciss typ.(pF)	Crss typ.(pF)
							10V	7V	4.5V	2.5V	1.8V				
EMB60N06C	TO-251	N	60	20	3.2	12	60		96			11	2.4	913	53
EMB60N06CS	TO-251	N	60	20	3.2	12	60		96			11	2.4	913	53
EMB70N08C	TO-251	N	80	20	3	15	65		85			15	2.8	1110	51
EMB70N08CS	TO-251	N	80	20	3	15	65		85			15	4.1	1110	51
EMP85N10CS	TO-251	N	100	20	2.5	73	8		10.5			21.1	8.1	2831	30
EMB12N10CS	TO-251	N	100	20	3	68	12		15			23	8.2	2130	29
EMB12N10CL	TO-251	N	100	20	3	68	12		15			23	8.2	2130	29
EMB14N10CS	TO-251	N	100	20	3	62	14.6		20			64	11	4505	44
EMD14N10CS	TO-251	N	100	30	4	40	14					39.3	3.1	3330	43
EMB22N10CS	TO-251	N	100	20	3	36	22		26			10.5	3.4	1503	6
EMBA5N10C	TO-251	N	100	20	3	10	150		175			18.8	4.5	1070	40
EMBA5N10CS	TO-251	N	100	20	3	10	150		175			18.8	4.5	1070	40
EMDE0N20C	TO-251	N	200	30	5	5	500					38	16	1321	18
EMDE0N20CS	TO-251	N	200	30	5	5	500					38	16	1321	18
EMBJ0N20CS	TO-251	N	200	20	3	3.5	1000		1400			28	9	1168	10
EMDJ0N20C	TO-251	N	200	30	5	3.5	1000					19	8.1	660	9
EMD04N10B	TO-263	N	100	20	4	180	3.5					108	36	7000	234
EMB06N03E	TO-220	N	30	20	3	80	6		9.5			30	17	4753	348
EMD04N04E	TO-220	N	40	20	4	155	4	5.5				83.6	34.5	3970	597
EMP17N04E	TO-220	N	40	20	3	276	1.7		2						
EMP25N04E	TO-220	N	40	20	4	172	2	2.8				104.2	29.9	6983	411
EMP29N04ES	TO-220	N	40	20	2.2	100	2.9		4.6			38	5.7	2690	53
EMP25N06E	TO-220	N	60	20	4	212	2.5					85	11	7625	125
EMD02N06E	TO-220	N	60	30	4	191	3.1					91	16	7935	248
EMD03N06E	TO-220	N	60	30	4	180	3.5					61	10	5519	50
EMD03N06ES	TO-220	N	60	20	4.5	150	4					46	12	3260	155
EMB04N06E	TO-220	N	60	20	2.5	165	4		5.5			49	9	3250	50
EMD04N06E	TO-220	N	60	20	4	155	4.8					59	19	5085	190
EMD06N06E	TO-220	N	60	20	4	125	6					40	11	3057	112
EMD08N06E	TO-220	N	60	20	4	110	8					35	11	2675	120
EMD10N06E	TO-220	N	60	20	4	100	10					30	10	2173	109
EMB20N06E	TO-220	N	60	20	3.2	60	20	24				43	11	3330	207
EMC04N08E	TO-220	N	75	30	4	163	4.3					59	9.7	5526	33
EMC07N08E	TO-220	N	75	30	4	132	6.5					37	7.8	3202	41
EMC08N08E	TO-220	N	75	30	4	118	8					27	6.8	2078	39
EMC09N08E	TO-220	N	75	30	4	103	9					37	10	2760	49
EMC13N08E	TO-220	N	75	30	4	80	13					42	17	10587	242
EMD04N08E	TO-220	N	80	30	4	160	4.6					58	8.5	5548	29
EMD07N08E	TO-220	N	80	30	4	128	7					36	6.5	3186	33
EMD09N08E	TO-220	N	80	25	4	103	9					64	22	3905	363

N-Channel MOSFET

P/N	Package	Channel	BVdss (V)	Vgs (±V)	VGS(th) max.(V)	Id (A)	Rds(on) mΩ max.					Qg typ.(nC)	Qgd typ.(nC)	Ciss typ.(pF)	Crss typ.(pF)
							10V	7V	4.5V	2.5V	1.8V				
EMD16N08E	TO-220	N	80	30	4	68	12.8					21	5	1683	29
EMD04N10E	TO-220	N	100	20	4	171	4.5	6				66.9	11.8	5400	36
EMD06N10E	TO-220	N	100	30	4	135	6.5					145	52	7880	460
EMD08N10E	TO-220	N	100	30	4	130	7.5					64	11	5587	23
EMP85N10E	TO-220	N	100	20	3	100	8.5		10.5			25.1	10.9	2975	28
EMB12N10E	TO-220	N	100	20	3	70	12		15			23	8.2	2130	29
EMD14N10E	TO-220	N	100	30	4	85	14					64.7	18.1	6557	122
EMB26N10E	TO-220	N	100	20	3	50	30		35			38	9.1	2725	57
EMD26N10E	TO-220	N	100	30	4	65	25					20.8	6.8	1575	47
EMD60N10E	TO-220	N	100	25	4	30	60					13.6	6	770	33
EMD11N15E	TO-220	N	150	20	4	120	11					82.4	33.4	4484	67
EMD50N15E	TO-220	N	150	30	4	48	50					30	8	1963	65
EMD60N15E	TO-220	N	150	30	4.5	43	60	70				38.2	14.5	2903	59
EMF65N15E	TO-220	N	150	16	1.2	35	55		65			97	28	10681	440
EMDE0N20E	TO-220	N	200	30	5	7	500					38	16	1321	18
EMP25N06F	TO-220F	N	60	20	4	106	3					85	11	7625	125
EMD03N06FS	TO-220	N	60	20	4.5	90	4.1					46	12	3260	155
EMB04N06F	TO-220F	N	60	20	2.5	80	4		5.5			49	9	3250	50
EMD04N06F	TO-220F	N	60	20	4	75	5					59	19	5085	190
EMD04N06FN	TO-220F	N	60	20	4	75	5					59	19	5085	190
EMC04N08F	TO-220F	N	75	30	4	86	4.4					59	9.7	5526	33
EMC13N08F	TO-220F	N	75	30	4	43	13					42	17	3368	286
EMD04N08FN	TO-220F	N	80	30	4	75	5					58	8.5	5548	29
EMD04N10FN	TO-220F	N	100	20	4	87	4					108	36	7000	234
EMD06N10F	TO-220F	N	100	30	4	60	6.5					145	52	7880	460
EMB14N10F	TO-220F	N	100	20	3	40	14.6		20			64	11	4505	44
EMD14N10F	TO-220F	N	100	30	4	40	14					64.7	18.1	6557	122
EMB26N10F	TO-220F	N	100	20	3	50	30		35			38	9.1	2725	57
EMD26N10F	TO-220F	N	100	30	4	50	25					20	6.8	1323	34
EMD60N10F	TO-220F	N	100	25	4	20	60					13.6	6	770	33
EMDA1N10F	TO-220F	N	100	25	4	15	110					8.1	4	410	20
EMDA5N10F	TO-220F	N	100	20	3.2	10	150		175			18.8	4.5	1070	40
EMD07N12FS	TO-220F	N	120	20	4	56	7	8				84.2	23.3	5666	25
EMD11N15F	TO-220F	N	150	20	4	45	11.5					75	28	4805	96
EMD50N15F	TO-220F	N	150	30	4	22	50					67.5	16.6	4905	200
EMD60N15F	TO-220F	N	150	30	4.5	20	60	70				38.2	14.5	2903	59
EMDA2N20F	TO-220F	N	200	30	4.5	18	120	140				36.4	13.4	2860	46
EMDE0N20F	TO-220F	N	200	30	5	7	500					21.3	6	803	16
EMDB0N25F	TO-220F	N	250	30	4.5	18	220					53	20	3740	72

N-Channel MOSFET

P/N	Package	Channel	BVdss (V)	Vgs (±V)	VGS(th) max.(V)	Id (A)	Rds(on) mΩ max.					Qg typ.(nC)	Qgd typ.(nC)	Ciss typ.(pF)	Crss typ.(pF)
							10V	7V	4.5V	2.5V	1.8V				
EMB04N03G	SOP-8	N	30	20	3	23	4.5		6			14.3	5.9	2094	162
EMB05N03GH	SOP-8	N	30	20	3	20	5		9			32	7.2	2935	142
EMB06N03G	SOP-8	N	30	20	3	18	6		9.5			21	9.7	1983	287
EMB09N03G	SOP-8	N	30	20	3	14	9.5		14.5			12	7.4	828	174
EMB12N03G	SOP-8	N	30	20	3	12	11.5		15			4.5	3.7	1060	145
EMB17N03G	SOP-8	N	30	20	3	12	17		26			7.8	4.7	597	96
EMB20N03G	SOP-8	N	30	20	3	8	20		30			6	3.3	1115	82
EMB12N04G	SOP-8	N	40	20	3	12	12		17			24	7.5	916	111
EMB22N04G	SOP-8	N	40	20	3	9	22		37			11	4.1	1205	57
EMP48N06G	SOP-8	N	60	20	3	21	4.8		6.3			24	3.7	3339	50
EMB06N06GS	SOP-8	N	60	20	3	17	5.2		7.5			42	12	2117	79
EMB12N06G	SOP-8	N	60	20	3	12	12		20			33	9	2128	68
EMB16N06G	SOP-8	N	60	20	2.5	6.7	16		20			55	15	2460	157
EMB45N06G	SOP-8	N	60	20	3.2	6.5	45		70			12	2.6	1213	70
EMB55N06G	SOP-8	N	60	20	3.2	6	55		70			12	2.6	685	21
EMB70N08G	SOP-8	N	80	20	3	6	65		85			15	2.8	1110	51
EMB90N08G	SOP-8	N	80	20	3	5	85		110			12	2.2	812	37
EMP85N10G	SOP-8	N	100	20	3	14	8.5		10.5			44	23	4430	108
EMB12N10G	SOP-8	N	100	20	3	12	12		17			23	8.2	2130	29
EMB22N10G	SOP-8	N	100	20	3	8	22		26			10.5	3.4	1503	6
EMB26N10G	SOP-8	N	100	20	3	9	30		35			38	9.1	2725	57
EMD26N10G	SOP-8	N	100	30	4	10	25					26	6.4	1945	24
EMB50N10G	SOP-8	N	100	20	3	7	50		70			55	10	2780	90
EMB60N10G	SOP-8	N	100	20	3	6	60		70			23	7.2	1210	38
EMBA0N10G	SOP-8	N	100	20	3	5	100		125			15	5	900	37
EMBA1N10G	SOP-8	N	100	20	3	4.5	110		130			13	4.8	645	24
EMBA5N10G	SOP-8	N	100	20	3	4	150		225			18.8	4.5	740	50
EMD50N15G	SOP-8	N	150	30	4	5	50	55				67.5	16.6	4905	200
EMD60N15G	SOP-8	N	150	30	4.5	6	60	70				38.2	14.5	2903	59
EMDE0N20G	SOP-8	N	200	30	5	1.6	500					38	16	1321	18
EMBJ0N20G	SOP-8	N	200	20	3	1.1	1000		1400			28	9	1168	10
EMDJ0N20G	SOP-8	N	200	30	5	1.1	1000					19	8.1	660	9
EMF14A02G	SOP-8	Dual N	20	12	1.2	6			14.8	23		10	3.5	2212	146
EMF20A02G	SOP-8	Dual N	20	12	1.2	6			20	28		10	3.5	2212	146
EMB11A03G	SOP-8	Dual N	30	20	3	12	11		18.5			15	7.6	952	200
EMB17A03G	SOP-8	Dual N	30	20	3	10	15		25			6	3.3	1115	82
EMB21A03G	SOP-8	Dual N	30	20	3	7.5	21		42			6	3.3	1115	82
EMB32A03G	SOP-8	Dual N	30	20	3	6.5	32		60			7.5	2.3	332	26
EMB55A03G	SOP-8	Dual N	30	20	3	4.5	55		90			6	1.8	319	53

N-Channel MOSFET

P/N	Package	Channel	BVdss (V)	Vgs (±V)	VGS(th) max.(V)	Id (A)	Rds(on) mΩ max.					Qg typ.(nC)	Qgd typ.(nC)	Ciss typ.(pF)	Crss typ.(pF)
							10V	7V	4.5V	2.5V	1.8V				
EMB22A04G	SOP-8	Dual N	40	20	3	8	22		37			11	4.1	1205	57
EMB08K04G	SOP-8	N1	40	20	3	10.5	8.8		15			24	16	1962	225
		N2	40	20	3	7.4	17.5		32			10	6	707	81
EMB45A06G	SOP-8	Dual N	60	20	3.2	6	45		70			12	2.6	1213	70
EMB60A06G	SOP-8	Dual N	60	20	3.2	5	55		85			11	2.4	913	53
EMB70A08G	SOP-8	Dual N	80	20	3	5	65		85			15	2.8	1110	51
EMB90A08G	SOP-8	Dual N	80	20	3	4.5	85		110			12	2.2	812	37
EMBA0A10G	SOP-8	Dual N	100	20	3	3.5	100		125			15	5	900	37
EMBA5A10G	SOP-8	Dual N	100	20	3	3	150		225			18.8	4.5	740	50
EMBE0A10G	SOP-8	Dual N	100	20	3	1.5	500		570			7.6	2.7	328	21
EMBJ7A25G	SOP-8	Dual N	250	20	3	0.5	1700		2000			5.5	2	225	7.5
EMB12K03GP	SOP-8	N1	30	20	3	9	15.5		35			4.5	3.3	597	96
		N2	30	20	3	10	12.5		25			6	3.7	762	130
EMB15K03GP	SOP-8	N1	30	20	3	8	22		36			5	2.8	520	62
		N2	30	20	3	9	15.5		26			7.2	4.7	597	96
EMB50N10S	DIP-8	N	100	20	3	8	50		70			55	10	2780	90
EMBA0N10S	DIP-8	N	100	20	3	6	100		125			15	5	900	37
EMB25A06S	DIP-8	Dual N	60	20	3.2	7	30		48			43	11	3330	207
EMB40A06S	DIP-8	Dual N	60	20	3.2	6	40		60			29	7.4	1745	88
EMB60A06S	DIP-8	Dual N	60	20	3.2	5	60		96			11	2.4	913	53
EMF30N02P	SOT-89	N	20	12	1.2	5			30	51	80	6.2	2.1	280	38
EMB21N03P	SOT-89	N	30	20	3	6	21		35			11	3.3	1115	82
EMB32N03P	SOT-89	N	30	20	3	5.5	35		52			7.5	2.3	332	26
EMBB5N10P	SOT-89	N	100	20	3	2.4	280		310			14.3	3.4	858	27
EMBE0N10P	SOT-89	N	100	20	3	1.8	500		570			7.6	2.7	328	21
EMF20N02K	TSOP-6	N	20	12	1.2	6			20	35		10	3.5	2212	146
EMB27N03K	TSOP-6	N	30	20	3	6	27		40			10	3.2	642	79
EMB32N03K	TSOP-6	N	30	20	3	5.5	35		50			7.1	2.2	323	53
EMF30G02K	TSOP-6	Dual N	20	12	1.2	5			30	51		10	3.5	627	94
EMF24N02Q	SOT-223	N	20	12	1.2	6			24	40		10	3.5	2212	146
EMB20N03Q	SOT-223	N	30	20	3	6	22		30			6	3.3	1115	82
EMBB5N10Q	SOT-223	N	100	20	3	3	250		300			20	5	858	16
EMBE0N10Q	SOT-223	N	100	20	3	2.1	500		570			7.6	2.7	328	21
EMBE0N15Q	SOT-223	N	150	20	3	2.1	500		540			20	4	680	13
EMDE0N20Q	SOT-223	N	200	30	5	1.6	500					21.3	6	803	16
EMBJ0N20Q	SOT-223	N	200	20	3	1.1	1000		1400			28	9	1168	10
EMDJ0N20Q	SOT-223	N	200	30	5	1.1	1000					19	8.1	660	9
EMBJ0N25Q	SOT-223	N	250	20	3	1.1	1000		1100			10.5	3	450	15
EMDJ0N25Q	SOT-223	N	250	20	5	1.1	1000					23	12	890	37

N-Channel MOSFET

P/N	Package	Channel	BVdss (V)	Vgs (±V)	VGS(th) max.(V)	Id (A)	Rds(on) mΩ max.					Qg typ.(nC)	Qgd typ.(nC)	Ciss typ.(pF)	Crss typ.(pF)
							10V	7V	4.5V	2.5V	1.8V				
EMF11N02J	SOT-23	N	20	12	1.2	8			11.5	13.5	18	17.1	5.1	1297	172
EMF14N02J	SOT-23	N	20	12	1.2	7			14.8	23		14.2	5	1192	174
EMF20N02J	SOT-23	N	20	12	1.2	6			20	35		10	3.5	700	187
EMF30N02JS	SOT-23S	N	20	12	1.2	5			30	51	80	6.2	2.1	280	38
EMF50N02JS	SOT-23S	N	20	12	1.2	3.6			45	60	85	4.6	1.5	355	40
EMA12N03J	SOT-23	N	25	20	3	7.5	12.8		18			17.6	5.5	705	111
EMB27N03J	SOT-23	N	30	20	3	6	27		40			10	3.2	642	79
EMB27N03JS	SOT-23S	N	30	20	3	6	27		40			10.9	3.4	522	82
EMB32N03JS	SOT-23S	N	30	20	3	5	35		50			7.1	2.2	323	53
EMB55N03JS	SOT-23S	N	30	20	3	3.5	55		85			6	1.8	319	53
EMF50N03JS	SOT-23S	N	30	12	1.2	3.5			50	80		5.2	1.8	362	39
EMB60N06J	SOT-23	N	60	20	3.2	3.5	60		75			13.8	4	623	44
EMBB0N10J	SOT-23	N	100	20	3	1.4	220		250			20	5	858	16
EMBE0N10JS	SOT-23S	N	100	20	3	0.9	500		570			7.6	2.7	328	21
EMBJ7N25J	SOT-23	N	250	20	3	0.4	1700		2000			5.5	2	225	7.5
EMF50N03M	SC-70	N	30	12	1.2	2.2			50	80		5.2	1.8	362	39

HV-N-Channel MOSFET

P/N	Package	Channel	BVdss (V)	Vgs (±V)	VGS(th) max.(V)	Id (A)	Rds(on) mΩ max. 10V	Qg typ.(nC)	Qgd typ.(nC)	Ciss typ.(pF)	Crss typ.(pF)
EMD05N50A	TO-252	N	500	30	4	5	1750	8.5	2.3	496	2.6
EMD07N50A	TO-252	N	500	30	4	7	1200	18	5	488	2.6
EMD02N60A	TO-252	N	600	30	5	2	5500	4.5	1.2	194	1.5
EMD04N65A	TO-252	N	650	30	5	4	2750	8.4	2.2	455	2.5
EMD06N60A	TO-252	N	650	30	4	6	1550	18	4	498	2.7
EMD04N70A	TO-252	N	700	30	4	4	3000	10.6	3.9	500	7.4
EMD05N50CS	TO-251	N	500	30	4	5	1850	8.5	2.3	496	2.6
EMD02N60CS	TO-251	N	600	30	5	2	5500	4.5	1.2	194	1.5
EMD04N60CS	TO-251	N	600	30	5	4	2500	8.4	2.2	455	2.9
EMD04N60CSB	TO-251	N	600	30	4.5	4	2400	11.9	5.4	548	9
EMD04N60CSK	TO-251	N	600	30	4	4	3300	10.6	3.9	539	8.1
EMD06N60CS	TO-251	N	600	30	4	6	1550	18	4	498	2.7
EMD04N65CS	TO-251	N	650	30	5	4	2750	8.4	2.2	455	2.5
EMD02N70CS	TO-251	N	700	30	4	2	6000	5.4	1.5	324	1.8
EMD05N70CS	TO-251	N	700	30	4	5	2500	9.4	2.9	530	3
EMD04N80CS	TO-251	N	800	30	4	4	3000	12.3	3.8	616	3.1
EMD07N50F	TO-220F	N	500	30	4	7	1200	18	5	488	2.6
EMD14N50F	TO-220F	N	500	30	4	14	600	27	6.5	1470	7.2
EMD02N60F	TO-220F	N	600	30	5	2	5500	4.5	1.2	194	1.5
EMD04N60F	TO-220F	N	600	30	5	4	2500	8.4	2.2	455	2.9
EMD06N60F	TO-220F	N	650	30	4	6	1550	18	4	498	2.7
EMD08N65FJ	TO-220F	N	650	30	5	8	500	21	11	765	2.5
EMD12N60F	TO-220F	N	650	30	4	12	750	21	6.4	1030	5.7
EMD05N70F	TO-220F	N	700	30	4	5	2500	9.4	2.9	530	3
EMD04N80F	TO-220F	N	800	30	4	4	3000	12.3	3.8	616	3.1
EMD06N80F	TO-220F	N	800	30	4	6	1650	21	6.4	825	4.6
EMD08N80F	TO-220F	N	800	30	4	8	1350	24.7	5.8	1450	7
EMD03N90F	TO-220F	N	900	30	4	3.5	4000	15	4.3	700	4.3

P-Channel MOSFET

P/N	Package	Channel	BVdss (V)	Vgs (±V)	VGS(th) max.(V)	Id (A)	Rds(on) mΩ max.					Qg typ.(nC)	Qgd typ.(nC)	Ciss typ.(pF)	Crss typ.(pF)
							10V	7V	4.5V	2.5V	1.8V				
EMZEA0P02Z	WLCSP	P	- 16	8	- 0.85	- 2.6			100	140	190	8.1	2.7	535	84
EMZFA1P03Z	WLCSP	P	- 30	12	- 1.2	- 2.4			110	150		8.6	2.9	525	80
EMF16P01VAT	EDFN2*2	P	- 10	8	- 1.2	- 10			16	24	32	13.9	4.8	1723	431
EMF25P02VA	EDFN2*2	P	- 20	8	- 1.2	- 7.8			25	35	50	21.7	6.9	1148	180
EMF25P02VAT	EDFN2*2	P	- 20	8	- 1.2	- 7.8			25	35	50	21.7	6.9	1148	180
EMF44P02VA	EDFN2*2	P	- 20	12	- 1.2	- 4.7			44	70	90	12.8	4.1	679	106
EMF44P02VAT	EDFN2*2	P	- 20	12	- 1.2	- 4.7			44	70	90	12.8	4.1	679	106
EMF60B02VA	EDFN2*2	Dual P	-20	8	- 0.85	- 3			65	100	140	7.2	2.3	382	60
EMF70P02VA	EDFN2*2	P	- 20	12	- 1.2	- 3.7			70	112	140	7.2	2.3	382	60
EMFA0P02VAT	EDFN2*2	P	- 20	12	- 1.2	- 3.4			100	135		5.4	1.3	450	41
EMB20P03VAT	EDFN2*2	P	- 30	20	- 3	- 8.7	20		38			20.3	3.2	1407	164
EMB20P03VAT-L	EDFN2*2	P	- 30	20	- 3	- 8.7	20		38			20.3	3.2	1407	164
EMB30P03VAT	EDFN2*2	P	- 30	20	- 3	- 8	30		50			13.3	3.2	910	108
EMB50P03VAT	EDFN2*2	P	- 30	20	- 3	- 4.5	50		85			9	2.5	820	97
EMB80P03VAT	EDFN2*2	P	- 30	20	- 3	- 3.6	85		145			5.1	1.1	337	36
EMZB20P03L	EDFN3*2	P	- 30	25	- 3	- 8	24		38			10	4.9	1407	164
EMB28P03L	EDFN3*2	P	- 30	25	- 1.9	- 10	26		34			8	3.3	779	97
EMF20P02V	EDFN3*3	P	- 12	8	- 1.2	-14			20	25	40	15	5.7	3100	413
EMF04P02V	EDFN3*3	P	- 20	12	- 1.2	- 46			6.3	7.5	9.5	49	7.6	6945	515
EMF09P02V	EDFN3*3	P	- 20	8	- 1.2	-20			9.5	12.5	18	32	13	7660	510
EMF21P02V	EDFN3*3	P	- 20	8	- 1.2	-14			21	25	40	15	5.7	3100	413
EMF44P02V	EDFN3*3	P	- 20	12	- 1.2	- 9.5			44	70		14	3.5	973	152
EMFA0P02V	EDFN3*3	P	- 20	12	- 1.2	- 4.5			100	135	180	5.4	1.3	450	41
EMB07P03V	EDFN3*3	P	- 30	25	- 3	-26	7.8		11.5			62.4	13	4294	566
EMZB08P03V	EDFN3*3	P	- 30	20	- 3	-25	8.5		15			32	13	3091	404
EMB09P03V	EDFN3*3	P	- 30	25	- 3	-24	9.5		18			20	10	3067	398
EMB12P03V	EDFN3*3	P	- 30	25	- 3	- 21	12		20			20	8.5	2363	326
EMB14P03V	EDFN3*3	P	- 30	25	- 3	- 20	14		22			16	7.5	2270	300
EMB20P03V	EDFN3*3	P	- 30	25	- 3	- 18	20		35			10	4.9	1407	164
EMZB20P03V	EDFN3*3	P	- 30	25	- 3	- 18	20		35			12	6	1407	282
EMB30B03V	EDFN3*3	Dual P	-30	20	- 3	- 6.5	35		55			13.3	3.2	910	108
EMB12P04V	EDFN3*3	P	- 40	20	- 3.2	- 22	12.6		23			47	10.4	3090	280
EMB16P04V	EDFN3*3	P	- 40	20	- 3.2	- 20	16		40			41	7.4	2950	250
EMB44P04V	EDFN3*3	P	- 40	20	- 3.2	- 12	44		75			15	3.1	810	72
EMB28P06V	EDFN3*3	P	- 60	20	- 3	- 33	25		33			33.7	14.5	3334	137
EMF20B02V	EDFN3*3	Dual P	- 20	12	- 1.2	- 8.5			20	25	40	16.5	6.8	3050	410
EMF02P02H	EDFN5*6	P	- 20	12	- 1.2	- 100			2.7	3.2	4.1	87	16	11116	592
EMF04P02H	EDFN5*6	P	- 20	12	- 1.2	- 72			5.5	6.6	8.6	49	7.6	6945	515

P-Channel MOSFET

P/N	Package	Channel	BVdss (V)	Vgs (±V)	VGS(th) max.(V)	Id (A)	Rds(on) mΩ max.					Qg typ.(nC)	Qgd typ.(nC)	Ciss typ.(pF)	Crss typ.(pF)
							10V	7V	4.5V	2.5V	1.8V				
EMP26P03H	EDFN5*6	P	- 30	25	- 3	- 100	2.5		4			166	38	10615	176
EMB03P03H	EDFN5*6	P	- 30	20	- 3	- 110	3.1		5			96.5	13.8	6400	656
EMB07P03H	EDFN5*6	P	- 30	25	- 3	- 70	7.5		11.5			62.4	13	4294	566
EMD07P03H	EDFN5*6	P	- 30	25	- 3.5	- 70	8	12				47.3	9.1	2788	362
EMZB08P03H	EDFN5*6	P	- 30	20	- 3	- 70	8.5		15			32	13	3091	404
EMB09P03H	EDFN5*6	P	- 30	25	- 3	- 75	9.5		17			52	10	3067	398
EMB12P03H	EDFN5*6	P	- 30	20	- 3	- 50	12		20			45	8.5	2363	326
EMB20P03H	EDFN5*6	P	- 30	25	- 3	- 35	20		35			9.8	4.9	1407	164
EMB07B03H	EDFN5*6	Dual P	- 30	20	- 3	- 24	7.8		11.5			60.3	15	3270	477
EMB12B03H	EDFN5*6	Dual P	- 30	20	- 3	- 20	13.5		20			45	8.5	2360	325
EMB12P04H	EDFN5*6	P	- 40	20	- 3	- 45	14		22			23.3	10.1	2479	204
EMF09P02A	TO-252	P	- 20	8	- 1.2	- 62			9	12.5	18	32	13	7660	510
EMF50P02A	TO-252	P	- 20	12	- 1.2	- 10			58	90		7	2.5	653	87
EMF90P02A	TO-252	P	- 20	12	- 1.2	- 10			90	150		10	3	1033	367
EMB03P03A	TO-252	P	- 30	20	- 3	- 85	3.3		5.2			96.5	13.8	6400	656
EMB06P03A	TO-252	P	- 30	25	- 3	- 80	6.5	9				100	20	4294	566
EMB07P03A	TO-252	P	- 30	25	- 3	- 80	7.5		12			62.4	13	4294	566
EMD07P03A	TO-252	P	- 30	25	- 3.5	- 70	8	12				47.3	9.1	2788	362
EMB09P03A	TO-252	P	- 30	20	- 3	- 75	9		17			56	11.5	4110	1198
EMB12P03A	TO-252	P	- 30	20	- 3	- 45	12		20			20	8.5	2363	326
EMB20P03A	TO-252	P	- 30	25	- 3	- 35	20		34			12	6	1407	282
EMB30P03A	TO-252	P	- 30	20	- 3	- 15	30		51			13.3	3.2	1759	615
EMB45P03A	TO-252	P	- 30	20	- 3	- 10	55		100			8.6	1.8	217	18
EMB12P04A	TO-252	P	- 40	20	- 3.2	- 25	12.6		23			50	11	3452	293
EMB16P04A	TO-252	P	- 40	20	- 3	- 25	16		40			45.4	8.2	2950	250
EMB25P04A	TO-252	P	- 40	20	- 3	- 20	25		42			25	4.9	1518	161
EMB44P04A	TO-252	P	- 40	20	- 3	- 25	44		75			11.5	2.8	745	58
EMB20P06A	TO-252	P	- 60	20	- 3	- 40	15		22			111	15.6	6478	328
EMB39P06A	TO-252	P	- 60	20	- 3	- 26	39		54			45	7.5	2975	150
EMB40P06A	TO-252	P	- 60	20	- 3	- 17	62		90			35	12	1450	120
EMB90P06A	TO-252	P	- 60	20	- 3	- 10	90.8		140			16.2	3.5	1370	63
EMBB0P10A	TO-252	P	- 100	20	- 3	- 10	205	225				31	4.5	2018	352
EMF09P02CS	TO-251	P	- 20	8	- 1.2	- 56			9	12.5	18	32	13	7660	510
EMB07P03CS	TO-251	P	- 30	25	- 2	- 80	6.8		11.5			62.4	13	4294	566
EMB39P06CS	TO-251	P	- 60	20	- 3	- 26	39		54			45	7.5	2975	150
EMB90P06C	TO-251	P	- 60	20	- 3	- 10	90.8		140			16.2	3.5	1370	63
EMB90P06CS	TO-251	P	- 60	20	- 3	- 10	90.8		140			16.2	3.5	1370	63

P-Channel MOSFET

P/N	Package	Channel	BVdss (V)	Vgs (±V)	VGS(th) max.(V)	Id (A)	Rds(on) mΩ max.					Qg typ.(nC)	Qgd typ.(nC)	Ciss typ.(pF)	Crss typ.(pF)
							10V	7V	4.5V	2.5V	1.8V				
EMB12P04F	TO-220F	P	- 40	20	- 3.2	- 25	12.6		23			50	11	3452	293
EMDA0P10F	TO-220F	P	- 100	20	- 4	- 22	120					58	10.5	7760	1643
EMF21P02G	SOP-8	P	- 20	8	- 1.2	- 13			21	25	40	20.9	8	2839	227
EMB07P03G	SOP-8	P	- 30	20	- 3	- 15	7.5		12			28	13	4294	566
EMZB08P03G	SOP-8	P	- 30	20	- 3	- 15	8.5		15			32	13	3091	444
EMB12P03G	SOP-8	P	- 30	25	- 3	- 13	10		16			25	13	3121	672
EMB14P03G	SOP-8	P	- 30	25	- 3	- 12	14		21			16	7.5	2270	300
EMB20P03G	SOP-8	P	- 30	25	- 3	- 10	18		34			18	9	2815	955
EMB45P03G	SOP-8	P	- 30	20	- 3	- 6	45		75			10	2	1320	460
EMB50P03G	SOP-8	P	- 30	20	- 3	- 6	60		80			9	2.5	820	97
EMB16P04G	SOP-8	P	- 40	20	- 3	- 9.5	16		40			41.7	8.2	2473	242
EMB40P04G	SOP-8	P	- 40	25	- 3	- 9	40.5		70			15	3.1	1223	366
EMB40P06G	SOP-8	P	- 60	20	- 3	- 7.5	40		55			45	7.5	2975	150
EMB90P06G	SOP-8	P	- 60	20	- 3	- 5	90		140			16.2	3.5	1370	63
EMDA0P10G	SOP-8	P	- 100	20	- 4	- 3.4	120					59	11	3520	115
EMF20B02G	SOP-8	Dual P	- 20	12	- 1.2	- 8.5			20	25	40	16.5	6.8	3050	410
EMFA0B02G	SOP-8	Dual P	- 20	12	- 1.2	- 3			100	150		10	3	1033	367
EMB24B03G	SOP-8	Dual P	- 30	25	- 3	- 8	24		37			18	9	2815	955
EMB50B03G	SOP-8	Dual P	- 30	20	- 3	- 5	50		80			9	2.5	820	97
EMB60B03G	SOP-8	Dual P	- 30	20	- 3	- 5	60		90			9	2.5	820	97
EMBB5B10G	SOP-8	Dual P	- 100	20	- 3	- 2.5	250		375			31	4.5	2040	47
EMB44P04Q	SOT-223	P	- 40	20	- 3	- 6	44		70			15	3.1	810	72
EMF44P02P	SOT-89	P	- 20	12	- 1.2	- 5.5			44	70	90	12.8	4.1	679	106
EMB45P03P	SOT-89	P	- 30	20	- 3	- 4	50		75			10	2	1320	460
EMBA5P06P	SOT-89	P	- 60	20	- 3	- 2.4	150		200			12.3	2.4	1032	48
EMF60P02K	TSOP-6	P	- 20	12	- 1.2	- 4.5			60	96		10	3	382	60
EMB50P03K	TSOP-6	P	- 30	20	- 3	- 5	50		85			10	2	1320	460
EMF44P02JS	SOT-23S	P	- 20	12	- 1.0	- 4			44	70	90	12.8	4.1	679	106
EMF60P02JS	SOT-23S	P	- 20	12	- 1.2	- 4			65	96	250	7.2	2.3	382	60
EMFA0P02JS	SOT-23S	P	- 20	12	- 1.2	- 3.4			100	135		5.4	1.3	450	41
EMB50P03JS	SOT-23S	P	- 30	20	- 3	- 4.5	50		85			9	2.5	820	97
EMB80P03JS	SOT-23S	P	- 30	20	- 3	- 3.6	85		145			5.1	1.1	337	36
EMBA3P03JS	SOT-23S	P	- 30	20	- 3	- 3.1	125		190			6.3	1.4	294	24
EMF44P03J	SOT-23	P	- 30	12	- 1.2	- 4	38		44	75		10	3.5	1079	93
EMBA5P06J	SOT-23	P	- 60	20	- 3	- 2.2	150		200			12.3	2.4	1032	48
EMFA0P02M	SC-70	P	- 20	12	- 1.2	- 1.6			100	135		7.2	2.3	382	60

LED driver IC

P/N	Input voltage	Driver	Package	Topology	PF	Conversion mode
EM8822AJ	Universal	MOSFET	SOT-23-6	Flyback/Buck	High PF	AC/DC

AC-DC PWM and Combo IC

Part No.	Start-Up (uA)	UVLO ON (V)	UVLO OFF (V)	Vcc (max.)(V)	Switching Freq. (kHZ)	Internal Slop Comp.	LEB (max.)(nS)	Freq. Swapping	Package Type
EM8635	6	15	8.5	26	65	Yes	400	Yes	SOT-23-6
EM8636	6	15	8.5	29.6	65	Yes	400	Yes	SOT-23-6
EM8671/A	48	16	10	27	65	Yes	400	Yes	SOP-7
EM8672	48	16	10	27	65	Yes	400	Yes	SOP-7
EM8569/C	48	16	10	31	100	Yes	400	Yes	DIP-7
EM8564A	48	16	10	31	100	Yes	400	Yes	DIP-7
EM8565D	48	16	10	31	100	Yes	400	Yes	DIP-7
EM8569D	48	16	8.8	31	100	Yes	400	Yes	DIP-7

Buck DC-DC Converter

Part No.	Vcc (min.)(V)	Vcc (max.)(V)	Vin (min.)(V)	Iout (max.)(A)	Vref (V)	Switching Freq. (HZ)	Soft Start	Comp	Duty (max.) (%)	Accuracy (%)	Protection	Package Type
EM5845VT	2.7	5.5	2.7	3.5	0.6	1M	Int.	Int.	90	+/- 1%	OCP,UVP,OVP	DFN3*3 10L
EM5841DVT	2.7	5.5	2.7	3.5	0.6	1M	Int.	Int.	90	+/- 1%	OCP,UVP,OVP	DFN3*3 10L
EM5841EVT	2.7	5.5	2.7	3.5	0.6	1M	Int.	Int.	90	+/- 1%	OCP,UVP,OVP	DFN3*3 10L

DC-DC Buck Controller

Part No.	Vcc (typ.)(V)	Vcc (max.)(V)	Vin (min.)(V)	Vref (V)	Switching Freq. (kHZ)	Soft Start	Comp	Duty (max.) (%)	Accuracy (%)	Protection	Package Type
EM5301	4	13.2	3.3	0.8	200	Int.	ext.	80	+-1%	OCP,UVP,OVP	PSOP8
EM5301A	4	13.2	3.3	0.8	300	Int.	ext.	80	+-1%	OCP,UVP,OVP	PSOP8
EM5301F	8.8	13.2	3.3	0.8	160	Int.	ext.	80	+-1%	OCP,UVP,OVP	PSOP8

Linear Regulator-CMOS LDO

Part No.	Vin (min.)(V)	Vin (max.)(V)	Vout (min.)(V)	Vout (max.)(V)	Iout (max.)(mA)	Vdrop (typ.)(mV@mA)	Protection	Package Type
EM1103	2.5	5.5	1.5	4.5	300	200mV/300mA	OTP,OCP	SOT-23-5L
EM1104	2.5	5.5	1.5	3.3	600	400mV/600mA	OTP,OCP	SOT-23-5L
EM1105	2.5	5.5	0.8	4.5	300	200mV/300mA	OTP,OCP	SOT-23-5L
EM1106	2.5	5.5	0.8	4.5	300	400mV/600mA	OTP,OCP	SOT-23-5L
EM1109	2.5	5.5	0.8	4.5	1000	450mV/1000mA	OTP,OCP	DFN3*3-08L
EM1109A	2.5	5.5	1.0	3.3	1000	450mV/1000mA	OTP,OCP	DFN3*3-08L
EM1109B	2.5	5.5	1.0	4.5	1000	450mV/1000mA	OTP,OCP	DFN3*3-08L
EM5106	1.0	Vcntl	0.8	Vcntl-2	3000	300mV/3000mA	OTP,OCP	DFN3*3-10L
EM5107/A	1.0	Vcntl	0.8	Vcntl-2	3000	300mV/3000mA	OTP,OCP	PSOP8
EM5109/A	1.0	Vcntl	0.8	Vcntl-2	3000	300mV/3000mA	OTP,OCP	PSOP8, DFN3*3-10
EM5111BP-500	3.0	30.0	5	5	150	700mV/150mA	OCP	SOT-89-3

Power Switch IC

P/N	Vin (min.)(V)	Vin (max.)(V)	Vout (min.)(V)	Vout (max.)(V)	Iout (max.)(mA)	Ron(max.)(mΩ)	Protection	Package Type
EM5209	0.8	5.5	0.8	5.5	6000	25mΩ/25mΩ	OTP	DFN3*2-14L
EM5207	0.8	2.5	0.8	2.5	6000	25mΩ/25mΩ	OTP	DFN3*2-14L
EM5201	0.8	5.5	VBIAS-2V	VBIAS-2V	10000	5.5mΩ	OTP	DFN3*3-8L
EM5201A	0.8	5.5	VBIAS-2V	VBIAS-2V	8000	7.8mΩ	OTP	DFN3*3-8L
EM5201B	0.8	5.5	VBIAS-2V	VBIAS-2V	4500	35mΩ	OTP	SOT23-6
EM5201DV	0.8	5.5	VBIAS-2V	VBIAS-2V	8000	7.8mΩ	OTP	DFN3*3-8L
EM5202D	0.8	5.5	VBIAS-2V	VBIAS-2V	10000	5.5mΩ	OTP	DFN3*3-8L
EM5203J/AJ	2.5	5.5	Vin	Vin	2000	80mΩ	OTP,OCP	SOT-23-5L
EM5203A/AN	2.5	5.5	Vin	Vin	3000	65mΩ	OTP,OCP	MSOP-8
EM5028/LV5029	-0.3	6	0.5	2.5	3000	40mΩ/70mΩ	OTP,SCP	DFN3X3-08L
EM5210	1.2	5.5	1.2	5.5	2000	120mΩ	OTP	SOT-23-6L
EM5213-10/15 J/AJ	2.5	5.5	Vin	Vin	1500	45mΩ	OTP,OCP	SOT-23-5L
EM5213-25 J/AJ	2.5	5.5	Vin	Vin	2500	70mΩ	OTP,OCP	SOT-23-5L
EM5213-30/34 J/AJ	2.5	5.5	Vin	Vin	3000	50mΩ	OTP,OCP	SOT-23-5L
EM5220	4.5	11	Vin	Vin	5000	31mΩ	OTP	DFN2*2-8L